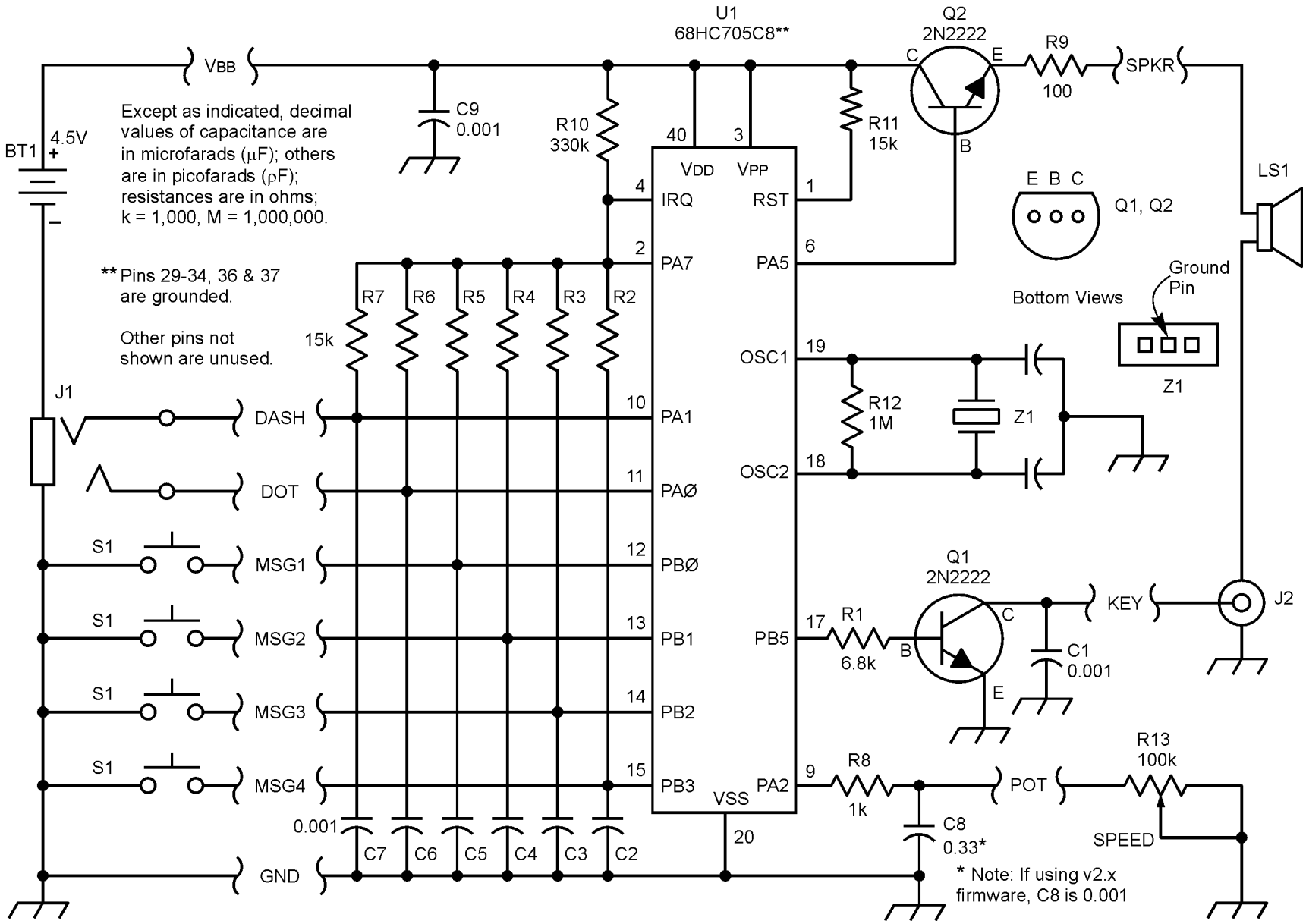CMOS SUPER KEYER II SCHEMATIC